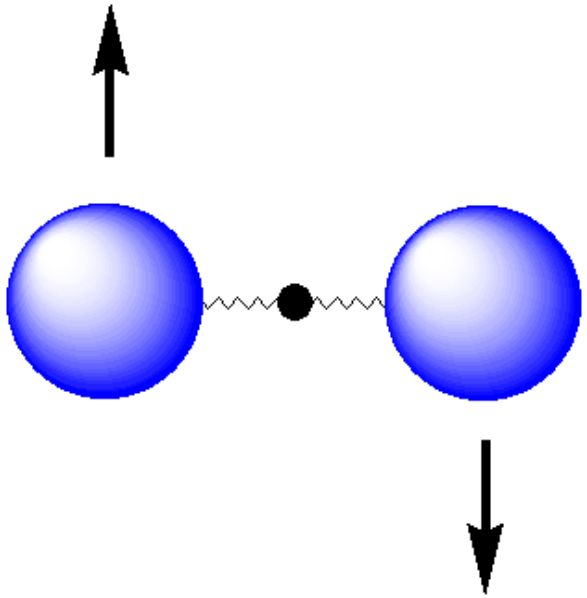

Molecular Rotation

Molecular Vibration

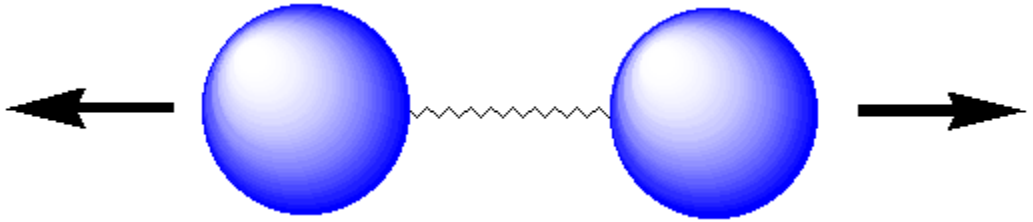

Vibrational Spectroscopy

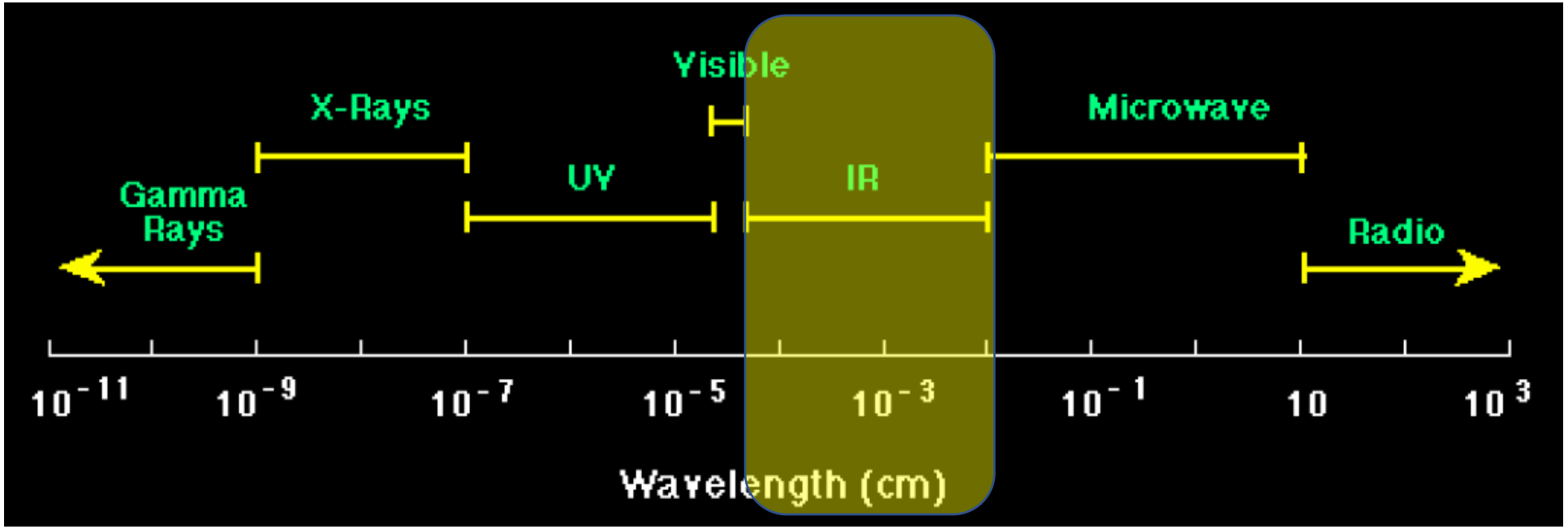

Vibration of a Ball and Spring System

A ball of mass m attached to a spring and displaced from its mean position.

The ball will follow oscillatory motion.

A **restoring force** (F) in the direction opposite to the displacement will force the ball to return back to its **equilibrium position**.

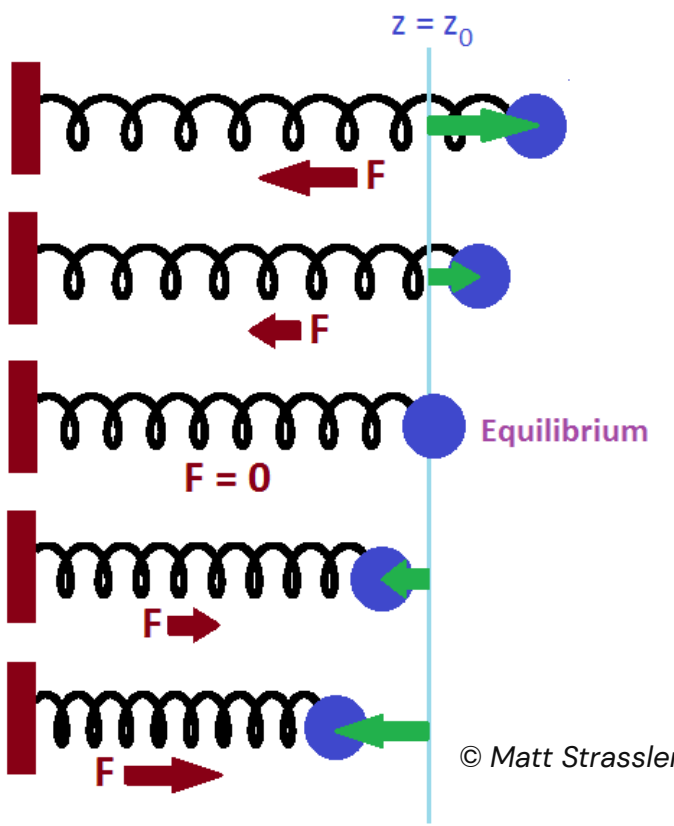

© Matt Strassler [August 28, 2012]

Vibration of a Ball and Spring System

To a first approximation, this motion follows the **Hooke's law** (simple harmonic motion).

$$F = -kx$$

where, F is the <u>restoring force</u>, k is the <u>force constant</u> and x is the <u>displacement</u> of the ball from its equilibrium position.

The <u>negative sign</u> shows that although the force acts in the direction opposite to that in which x increase, $\boldsymbol{k}$ **will have a positive value** (unit: dynes cm^{-1} (cgs); Newton m^{-1} (SI)).

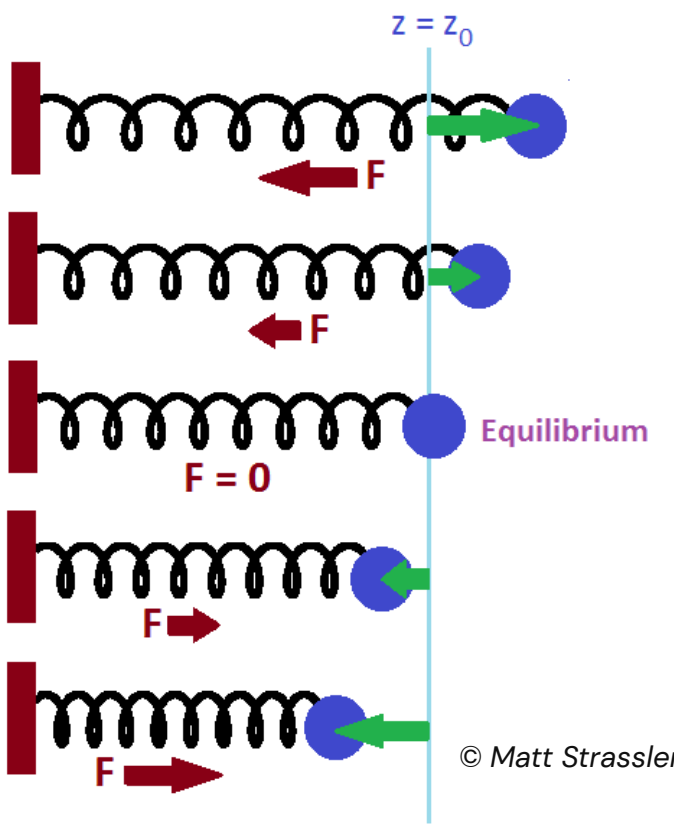

© Matt Strassler [August 28, 2012]

Vibration motion of the spring

The equation that describes the displacement of the ball from its equilibrium position:

$$x = Asin(const.)t$$

where, A is the amplitude of vibration, the "$const.$" is a coefficient of time t, which is identified as $2\pi\omega$, where ω is the frequency of oscillation (the **fundamental vibrational frequency**).

$$\boxed{x = Asin2\pi\omega t}$$

$$\boxed{F = -kx}$$

According to Newton's second law of motion, the restoring force can be expressed as a product of mass of the ball and the acceleration.

$$m\frac{d^2x}{dt^2} = -kx$$

describes the motion of the ball with respect of time

Or, $$\boxed{\frac{d^2x}{dt^2} = -\frac{k}{m}x}$$

The **restoring force** can be expressed as a product of mass of the ball and the acceleration of the vibrating motion.

Now, $x = Asin2\pi\omega t$ hence, $\frac{dx}{dt} = 2\pi\omega Acos2\pi\omega t$

and, $$\boxed{\frac{d^2x}{dt^2} = -4\pi^2\omega^2 Asin2\pi\omega t = -4\pi^2\omega^2 x}$$

$$\boxed{\frac{d^2x}{dt^2} = -\frac{k}{m}x}$$

$$\boxed{\frac{d^2x}{dt^2} = -4\pi^2\omega^2 x}$$

$$\boxed{4\pi^2\omega^2 = \frac{k}{m}}$$

$$\boxed{\omega = \frac{1}{2\pi}\sqrt{\frac{k}{m}}}$$

- For a given spring and mass of the ball, there is a **characteristic (or natural) frequency of vibration** (ω).

- The **force** required to set the ball attached to spring, into vibratory motion will be **large if the spring is very stiff or the ball attached to the spring is heavy**.

Consider a spring attached with two balls of masses m_1 and m_2, respectively and lying on a frictionless table.

The displacement from the equilibrium position is $x_2 - x_1$ and Newton's equation of motion for each particle can be written as

$$k(x_2 - x_1) = m_1 \frac{d^2 x_1}{dt^2}$$

and $$-k(x_2 - x_1) = m_2 \frac{d^2 x_2}{dt^2}$$

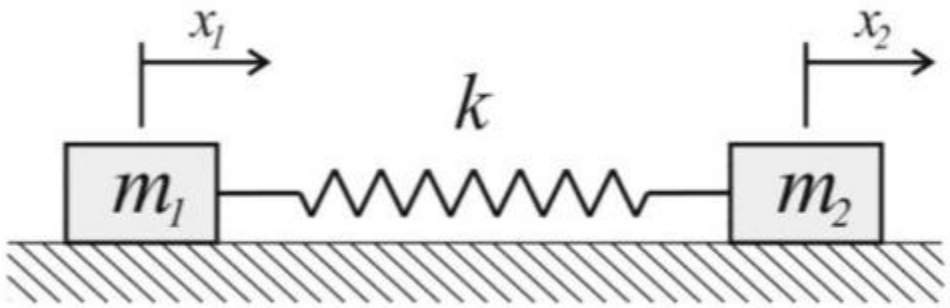

The spring is stretched and allowed to vibrate.

$$k(x_2 - x_1) = m_1 \frac{d^2 x_1}{dt^2}$$

$$-k(x_2 - x_1) = m_2 \frac{d^2 x_2}{dt^2}$$

The simple solutions to these equations are

$x_1 = A_1 sin 2\pi\omega t$ and $x_2 = A_2 sin 2\pi\omega t$

where, the amplitude terms for the particles 1 and 2 can be different but the frequency ω must be the same.

Therefore, we get,

$$kA_2 sin 2\pi\omega t - kA_1 sin 2\pi\omega t = -4\pi^2\omega^2 m_1 A_1 sin 2\pi\omega t$$

and, $$-kA_2 sin 2\pi\omega t + kA_1 sin 2\pi\omega t = -4\pi^2\omega^2 m_2 A_2 sin 2\pi\omega t$$

Simplification and rearrangement gives,

$$A_2 k = (k - 4\pi^2\omega^2 m_1)A_1$$

or,

$$(k - 4\pi^2\omega^2 m_2)A_2 = kA_1$$

Therefore,

$$\frac{k}{k - 4\pi^2\omega^2 m_2} = \frac{k - 4\pi^2\omega^2 m_1}{k}$$

or, $$k^2 = (k - 4\pi^2\omega^2 m_2)(k - 4\pi^2\omega^2 m_1)$$

or, $$k^2 = k^2 - 4\pi^2\omega^2(m_1 + m_2) + 16\pi^4\omega^4 m_1 m_2$$

or, $$\omega^2 = \frac{k(m_1 + m_2)}{4\pi^2 m_1 m_2}$$ and, $$\boxed{\omega = \frac{1}{2\pi}\sqrt{\frac{k}{\mu}}}$$

The spring has a natural frequency of vibration and is related to the force constant and reduced mass of the system.

Diatomic molecules

Two atoms combined to form a stable covalent molecule.

They settle at a mean internuclear distance such that there is a balance between the attractive and the repulsive forces among the atoms.

Any attempt to distort the bond length requires input of energy. **The energy can be plotted against the internuclear distance**.

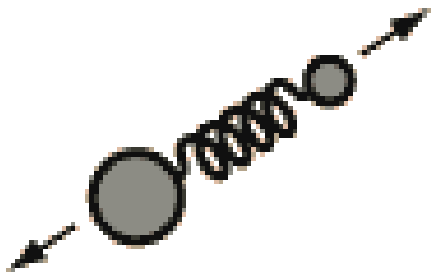

The bond like a spring obeys Hooke's Law.

$$f = -k(r - r_{eq})$$

f is the restoring force, *k* is the force constant, and *r* is the internuclear distance.

The energy curve has the form:

$$E = \frac{1}{2}k(r - r_{eq})^2$$ **Equation of a parabola**

The Simple Harmonic Oscillator

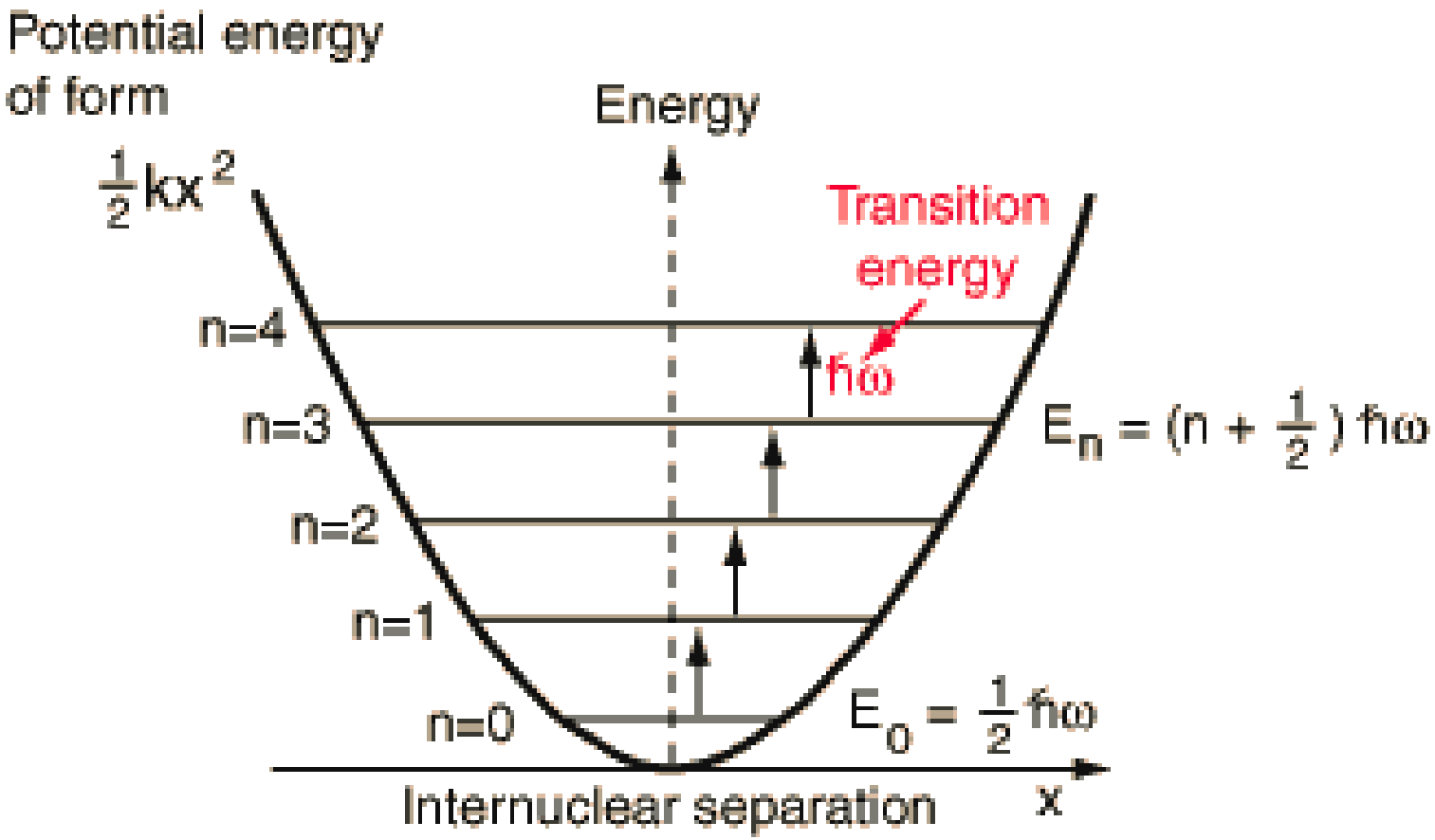

The oscillation frequency is:

$$\omega_{osc} = \frac{1}{2\pi}\sqrt{\frac{k}{\mu}} \text{ Hz}$$

$$\overline{\omega}_{osc} = \frac{1}{2\pi c}\sqrt{\frac{k}{\mu}} \text{ cm}^{-1}$$

The vibrational energies are quantized.

For simple harmonic motion:

$$E_{\upsilon} = \left(\upsilon + \frac{1}{2}\right) h\omega_{osc} \text{ joules} \quad (\upsilon = 0, 1, 2, ...)$$

$$\varepsilon_{\upsilon} = \frac{E_{\upsilon}}{hc} = \left(\upsilon + \frac{1}{2}\right)\overline{\omega}_{osc} \text{ cm}^{-1}$$

υ is the vibrational quantum number.

$\upsilon = 0$ gives the lowest vibrational energy.

$$E_0 = \frac{1}{2} h\omega_{osc} \text{ joules} \qquad (\omega_{\text{osc}} \text{ is in Hz})$$

$$\varepsilon_0 = \frac{1}{2} \overline{\omega}_{osc} \text{ cm}^{-1} \qquad (\overline{\omega}_{\text{osc}} \text{ is in cm}^{-1})$$

Diatomic molecules can never have zero vibrational energy. This is true for any molecule.

The atoms can never be completely at rest relative to each other.

$$\frac{1}{2}h\omega_{osc} \text{ joules} \leftarrow \underline{\text{zero-point energy}} \rightarrow \frac{1}{2}\overline{\omega}_{osc} \text{ cm}^{-1}$$

$\Downarrow$

depends on
The strength of the chemical bond,
And the atomic masses

<u>Classical mechanics</u>: Molecule having no vibrational energy is permitted.

<u>Quantum mechanics</u>: Molecule should always vibrate to some extent.